University POLITEHNICA of Bucharest

Power Engineering Faculty

www.energ.pub.ro

Energy for a better life !

Dinca Cristian
Head of Energy Generation and Use Department

Canada Romania Partnership in Nuclear Technologies Conference,
March 2021

- **UPB is the oldest and most prestigious engineering school in Romania, with a tradition of 200 years**
- **15 faculties**
- **Undergraduate studies in 15 fields with 66 distinct specializations**
- **M.Sc. studies in 15 fields with 97 distinct specializations**
- **Ph.D. studies in 19 fields**
- **When set up in 1950, it was the first academic institution in the energy engineering field in Romania**
- **It offers Bachelor, Master and Ph.D. Programs in accordance with the European system of transferable credits**
- **It covers all fields of Energy Engineering**

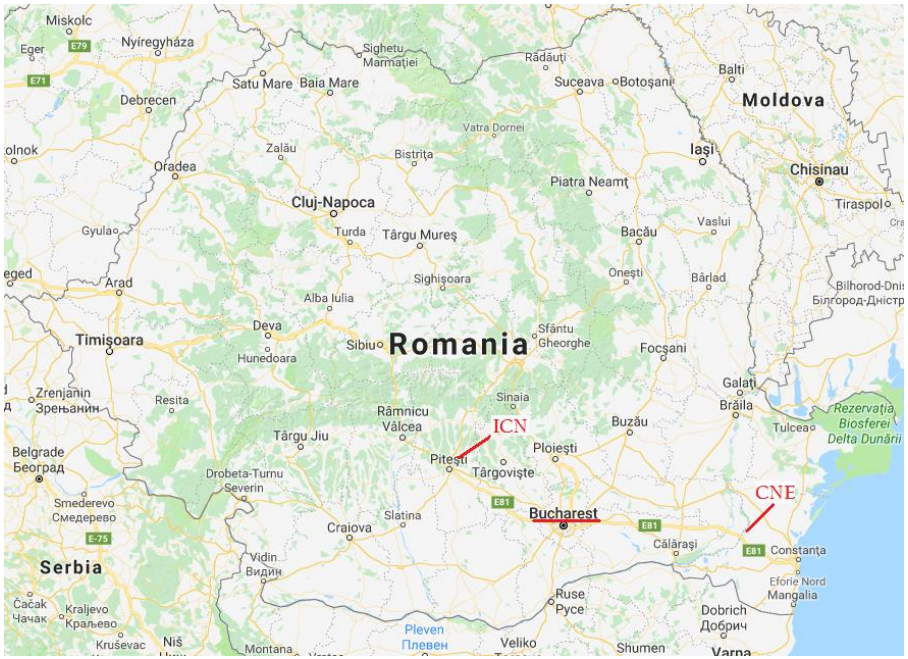

Power engineering

8 semester, minim 240 credit points (ECTS)

Field	*Programs*	*Students places*
Energy Engineering(*) (*) Students will be assigned to the specializations of the field of Energy Engineering at the end of the second year of studies	**Energy and Informatics Technologies**	
	Energy and Environmental Technologies	**405**
	Energy and Nuclear Technologies	
	Hydro-energy	
	Electrical Power Systems Engineering	
	Energy Management	
	Thermal Power Engineering	

Master studies programs

4 semester, minim 120 credit points (ECTS)

Field	*Programs*	*Students places*
Energy Engineering	Energy Efficiency	225
	Hydro informatics and Water Engineering	
	Applied Informatics in Power Engineering	
	Power System Management	
	Nuclear Engineering	
	Energy Services	
	Renewable Energy Sources	
	Energy and Smart Cities	
	Energy Engineering	
Environment Engineering	Environmental Management and Sustainable Development	25
Management in Engineering	Management of the Energy Systems	25

Energy and Nuclear Technologies– ETN

- **Specific core competencies** for the nuclear field
  - ✓ specific processes in nuclear energy - nuclear processes, theory of nuclear reactors, energy production cycles, radiation protection and dosimetry, nuclear materials;
  - ✓ nuclear power plants, installations and related systems: nuclear reactor engineering, thermal installations, turbomachines, pipeline systems, instrumentation and control;
  - ✓ nuclear safety, reliability of nuclear installations, nuclear regulations and legislation;
- **Internship 3 months** performed in companies in the field of study program (NUCLEARELECTRICA - Cernavoda NPP Branch, Center for Technological Engineering and Nuclear Objectives Măgurele, Pitești Nuclear Research Institute, National Commission for the Control of Nuclear Activities)

Bachelor Program – 4 years:

- **General courses for the first two years, 80 % common to all faculties**
- **Specialized courses for the following two years**

1st and 2nd years	3rd and 4th years
Mathematics Mechanical Engineering Physics Chemistry Technical Thermodynamics Fluid Mechanics Electrical Engineering Fundamentals Heat Transfer	Fundamentals of Nuclear Reactor Theory Dosimetry and Radioprotection Turbomachinery Reliability Nuclear Power Plants Nuclear Installation Thermal-Hydraulics Nuclear Materials and Technology Nuclear Engineering Nuclear Power Plant Systems Nuclear Technology (not for power generation)

- **12 weeks student practice at the end of 3rd year: includes 3 weeks at Cernavoda NPP and trip field to nuclear installations in Romania**

Master Program – 4 years:

- **Characteristics:**
  - **Research Master Program**
  - **Full Two-Years Program - 28 h/week –120 ECTS**
  - **Oriented towards CANDU (mainly) and LWR systems, plus two courses related to Gen. IV reactors systems and FBR**
  - **Mandatory courses**
  - **Master thesis**
  - **Part of the Nuclear Engineering European Master Program**

- **Target group:**
  - **Students from Energy Engineering Program and/or equivalent program**

Master Program – 2 years:

- ***Scope:***
  - **To provide sound general knowledge in the field of nuclear engineering for the rapid adaptation of graduates to the labor market, especially in related research institutes and Cernavoda NPP, as well as in the specialized companies in the field**
  - **To develop the knowledge and skills required to pursue specialized studies in doctoral programs**

- **Potential employers:**
  - **Nuclear utilities**
  - **Research facilities**
  - **Regulatory body**
  - **Nuclear industries companies**

Energy and Nuclear Technologies - ETN

Laboratorul de Modelare şi Simulare Procese Dinamice

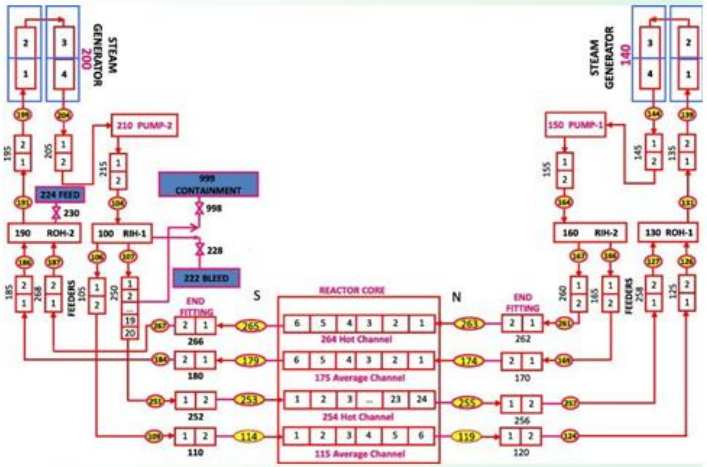

Model de discretizare CANDU specific codului RELAP

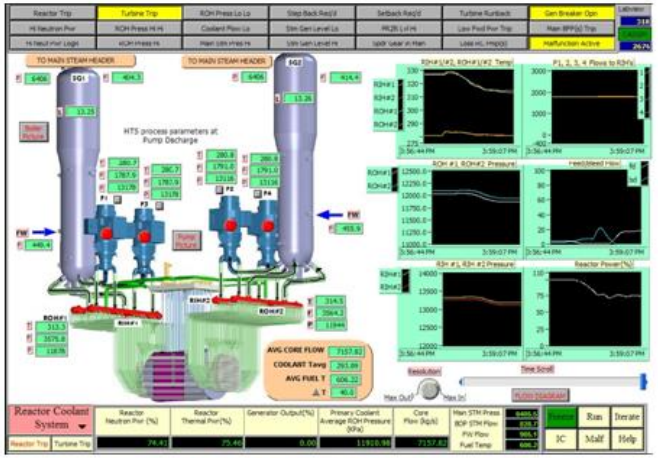

Simulator "Advanced Candu Reactor"

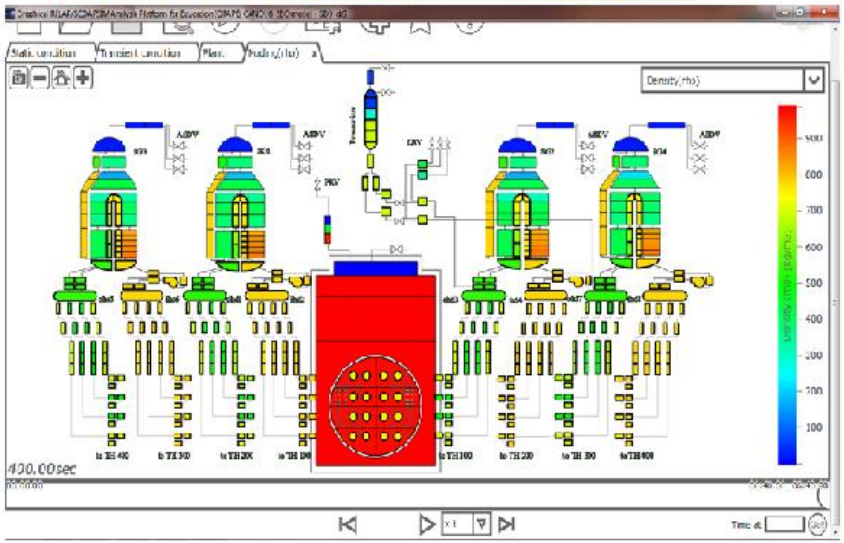

SBO analysis using GRAPE interface

University POLITEHNICA of Bucharest
Power Engineering Faculty

Splaiul Independenței, nr. 313,
Building EH, sector 6, București

Phone Dean: 021 402 9433
Phone Secretary: 021 402 9322

secretariat.energetica@upb.ro

http://www.energ.pub.ro

facebook/Facultatea.Energetica

http://www.energ.pub.ro/contact.html

Power Engineering – Best choice!