Two Specialists

No Compromise

KAWASAKI Gas Turbine Europe GmbH

CHP and Combined Cycle-Plants

General Company Presentation

Kawasaki
Powering your potential

Agenda

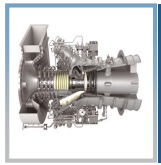

1 Kawasaki Heavy Industries (KHI)

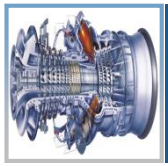

2 Kawasaki Gas Turbine Europe (KGE)

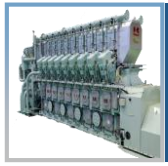

3 Kawasaki Products & Services

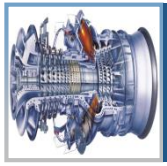

4 Developments for Hydrogen Gas Turbines @ KHI

Kawasaki Heavy Industries – Sections

Kawasaki Heavy Industries, Ltd.

- **Ships & Offshore Structure Company**

- **Rolling Stock Company**

- **Aerospace Company**

- **Energy System & Plant Engineering Company**
  - **Kawasaki Gas Turbine Europe GmbH (Germany)**
  - **Kawasaki Gas Turbine Asia Sdn. Bhd. (Malaysia)**
  - **Kawasaki Gas Turbine Asia Sdn. Bhd. - Jakarta Representative Office**
  - **Kawasaki Heavy Industries, LTD - Bangkok Office**

- **Motorcycle & Engine Company**

- **Precision Machinery Company**

Kawasaki Heavy Industries – Product Segment Overview

Precision Machinery

Ship & Offshore Structure

Rolling Stock

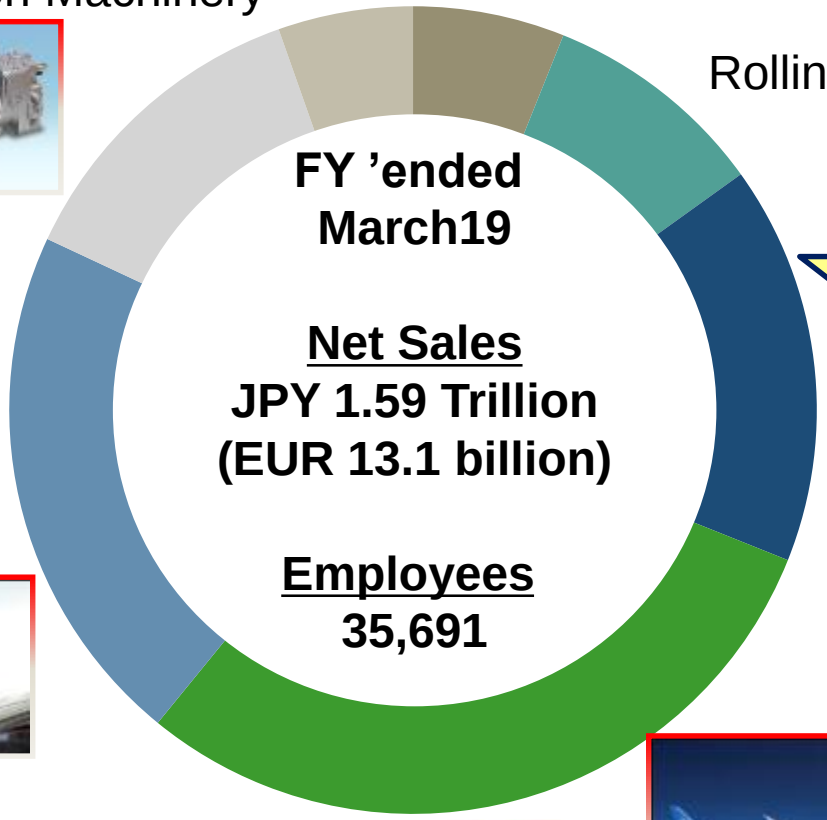

Motorcycle & Engine

Energy System & Plant Engineering

Aerospace

Kawasaki Gas Turbine Europe (KGE) – History

1975 License Agreement with Deutz AG

- *Deutz, Cologne starts the Sales and Service of the M1A Gas Turbine*
- *MWM Diesel & Gastechnik, Mannheim takes over the business from Deutz*

1998 Establishment of KAWASAKI Gas Turbine Europe GmbH

- *Headquarter for the entire European Market*
- *Sales, Packaging and Service of Gas Turbine Generator Sets*
- *10 Employees*

2003 Expansion of Production Facilities

- *Relocation to Bad Homburg (close to Frankfurt City)*
- *Establishment of the Production Site and Service Centre Europe*
- *Start of in-house packaging of GPB17D*
- *25 Employees*

2013 Introduction of the Gas Engines into the product portfolio

- *Start of Promotion and Sales of KG-12/V and KG-18/V*
- *40 Employees*

2018 Establishment of Romanian Office in Bucharest

- *Promotion & Sales Activities started, responsible for South-East Europe*
- *Currently: 67 Employees*

Bundesverband Kraft-Wärme-Kopplung e.V.

European Union context for KGE business

- EU-ETS – reduction of CO_2 emissions;
- 2015 Paris Agreement – greenhouses gas emissions reduction 2020 – 2030, limit global warming to no more than 2 deg. C;
- EU Directive 27/2012 – Energy Efficiency
- Decision 1442/2017 – En. Eff. levels and Emiss. Levels associated with BAT;

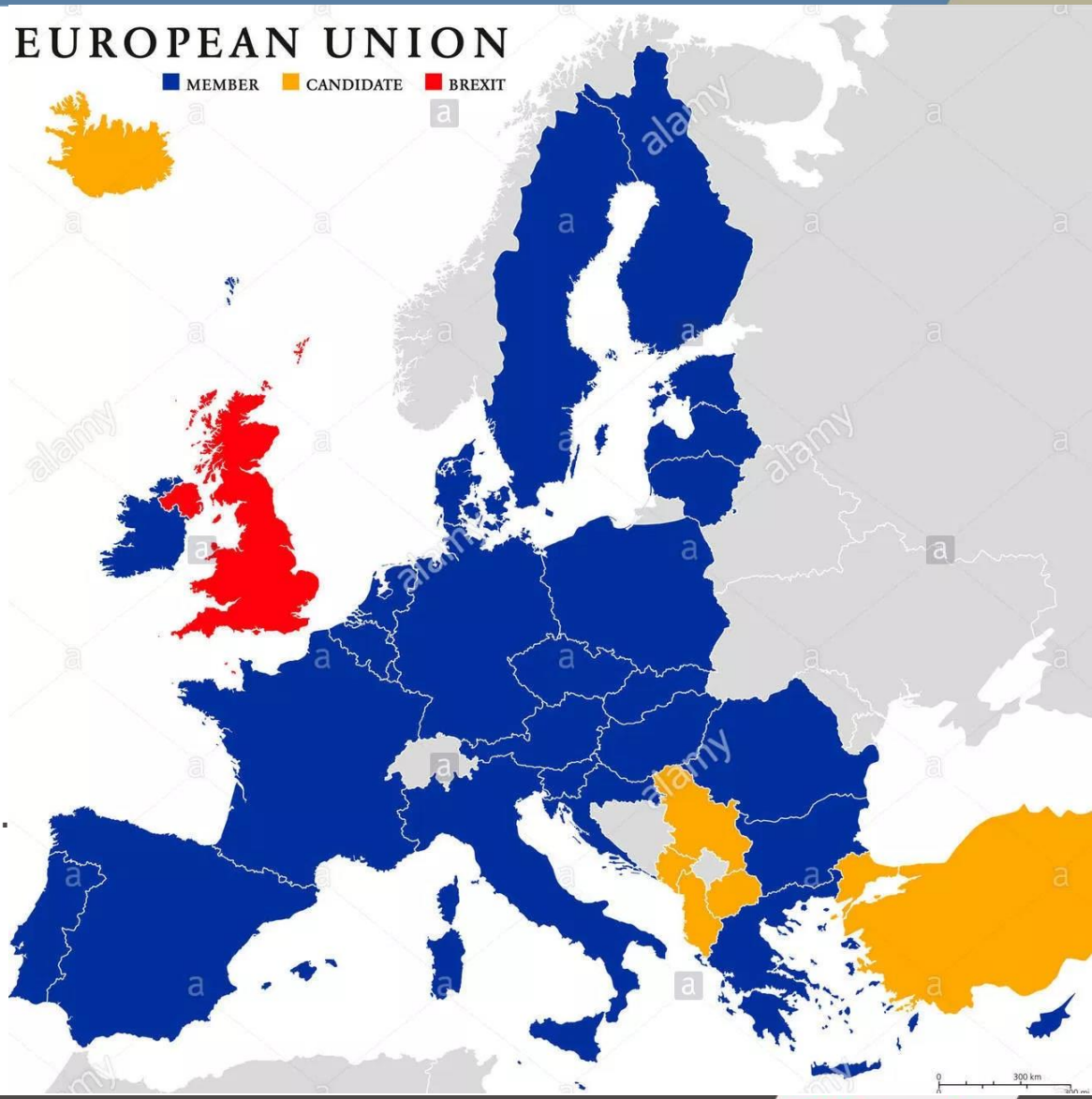

Kawasaki's challenge

How can Kawasaki, Japanese/German company, contribute to such European environmental policy ?

KGE's Take

Working as one for the good of the planet!

Highly Focusing on Environmental Protection and Energy Savings

- **Reduction of emissions**
  Global warming gas CO_2
  Harmful gas NO_x, SO_x
- **Energy Saving**

- **Renewable energy**

Distributed Generator System

- **Provide highly efficient energy use**
- **Flexible and reliable**

to complement unstable renewable energy

Planning of cogeneration power plants

Potential clients of cogeneration

- **Industry**

Pulp and paper

Medicines and cosmetics

Refinery / Chemistry

Food and beverages industry

Automotive and tyres

Ceramics

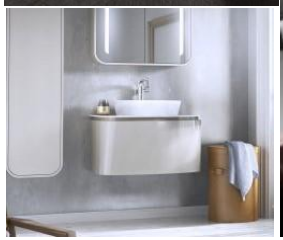

Planning of cogeneration power plants

Potential clients of cogeneration

- **District Heating**

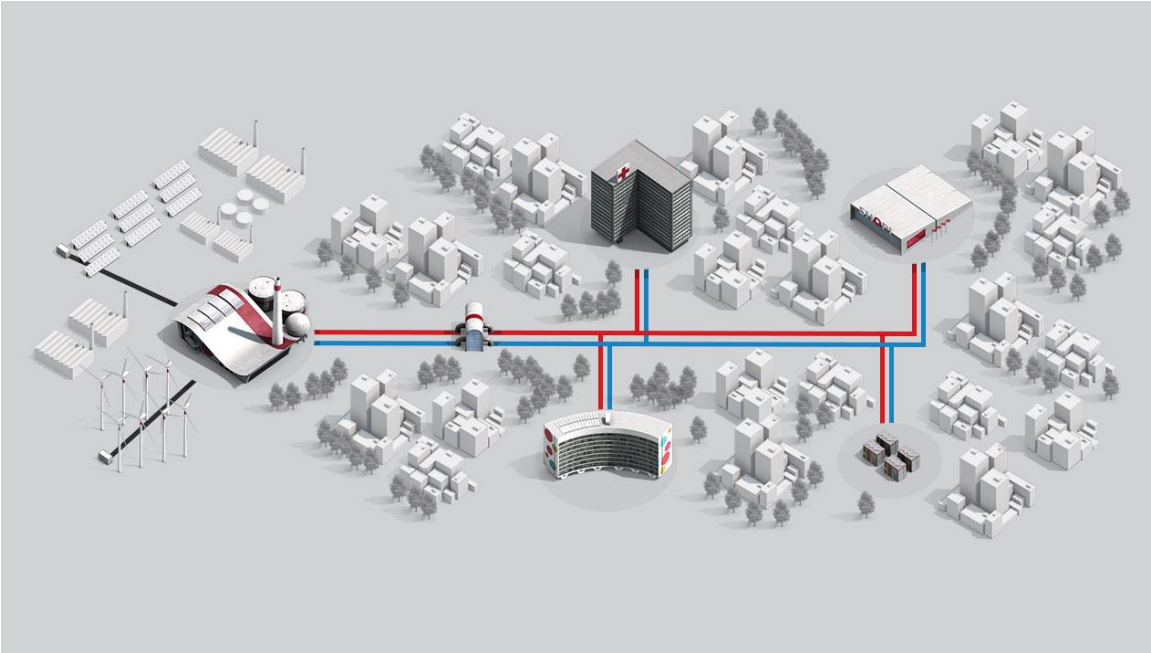

- **Services with own small cogeneration unit:**

Universitary campus **Hospitals** **Hotels** **Airports**

Planning of cogeneration power plants

Main steps to size a cogeneration unit

- **Calculating heat and electricity demand**
- **Analysis of consumption profile and simultaneity electricity and heat consumption**

example

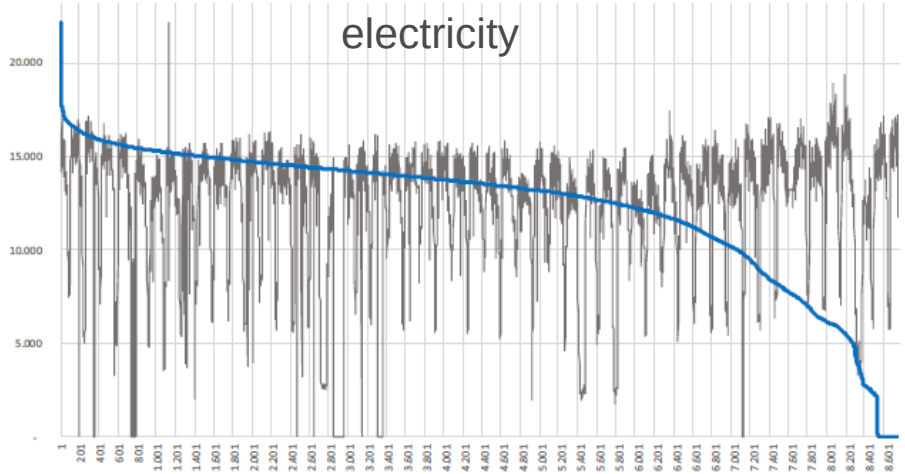

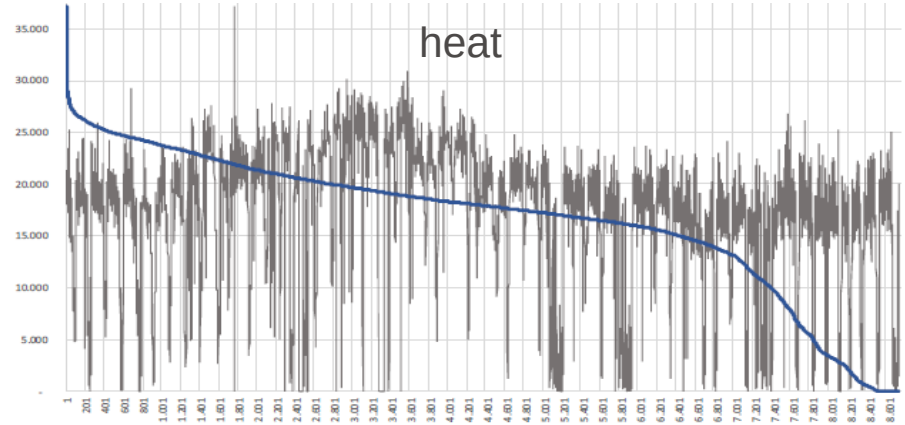

Planning of cogeneration power plants

Main steps to size a cogeneration unit

- Sizing criteria
  - Heat demand: heat demand is main criteria and electricity is a result
  - Electricity demand: electricity is main criteria and heat is a result
- Cogeneration technology
- Sizing of cogeneration unit
- Investment (CAPEX)
- Technic and economic calculation
  - Yearly operation data
  - Criteria of high efficiency cogeneration – CE Directive no. 27/2012
  - OPEX
- Financing solution
  - Own funds and / or loans
  - BOOT
  - EU funds
  - Grants

Kawasaki Products & Services

Kawasaki Gas Turbine Europe · Kawasaki Heavy Industries

Products

Services

Gas Turbines	Gas Engines
M1A-17D 1,816 kWel η = 28.1 %	**KG12** 5,200 kWel η = 49.0 %
M5A-01D 4,720 kWel η = 32.6 %	**KG12-V** 5,200 kWel η = 49.5 %
M7A-03D 7,810 kWel η = 33.6 %	**KG18** 7,800 kWel η = 49.0 %
L20A-01D 18,500 kWel η = 34.3 %	**KG18-V** 7,800 kWel η = 49.5 %
L30A-01D 34,300 kWel η = 40.3 %	

Engineering	Implementation	Maintenance
Concept Engineering	Project Planning	Spare Parts Comsumables
Detailed Engineering	Customized Packaging	Full Maintenance
	Erection Commissioning	Remote Monitoring

Other Services

Low-interest loans
(i.e. governmental loans)

Kawasaki Gas Turbine Engine Models

M1A-17D

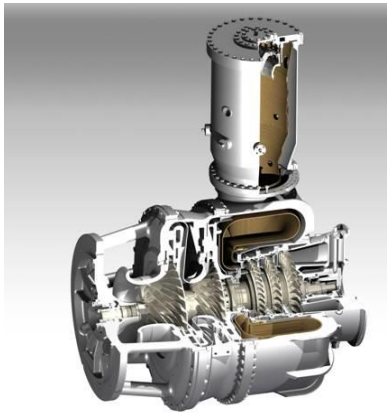

	M1A-17D
Power Output[kWe]	1,816
Ele. Efficiency[%]	28.1
Exhaust Gas Temperature[degC]	522
NOx [ppm] CO [ppm]	< 9 50

M7A-03D

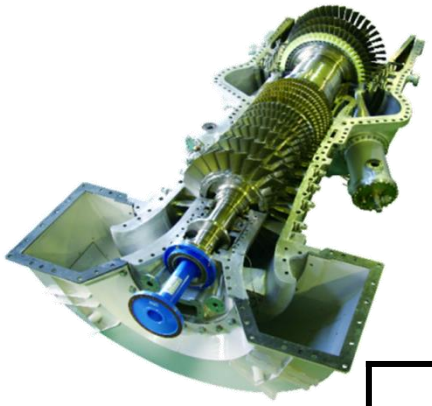

	M7A-03D
Power Output[kWe]	7,810
Ele. Efficiency[%]	33.6
Exhaust Gas Temperature[degC]	523
NOx [ppm] CO [ppm]	< 9 10

M5A-01D

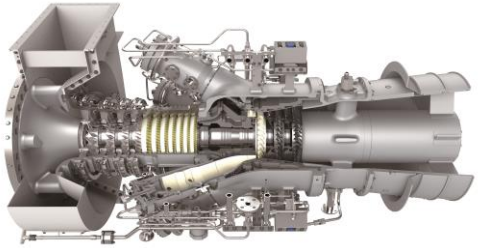

	M5A-01D
Power Output[kWe]	4,720
Ele. Efficiency[%]	32.6
Exhaust Gas Temperature[degC]	511
NOx [ppm] CO [ppm]	15 15

L20A

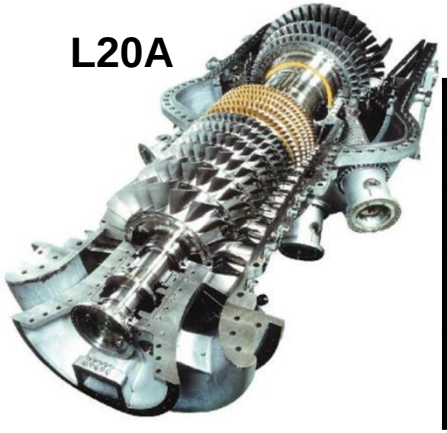

	L20A
Power Output[kWe]	18,500
Ele. Efficiency[%]	34.3
Exhaust Gas Temperature[degC]	542
NOx [ppm] CO [ppm]	15 25

L30A

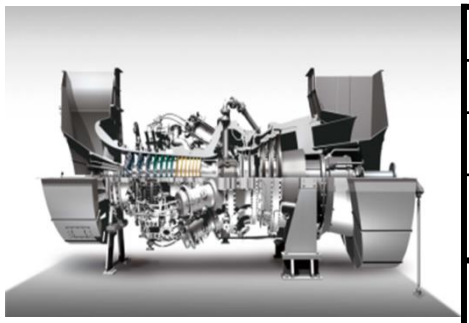

	L30A
Power Output[kWe]	34,380
Ele. Efficiency[%]	40.3
Exhaust Gas Temperature[degC]	502
NOx [ppm] CO [ppm]	15 / 9 25

Possible Applications in Cogeneration – 1/3

Combined Cycle Power Production

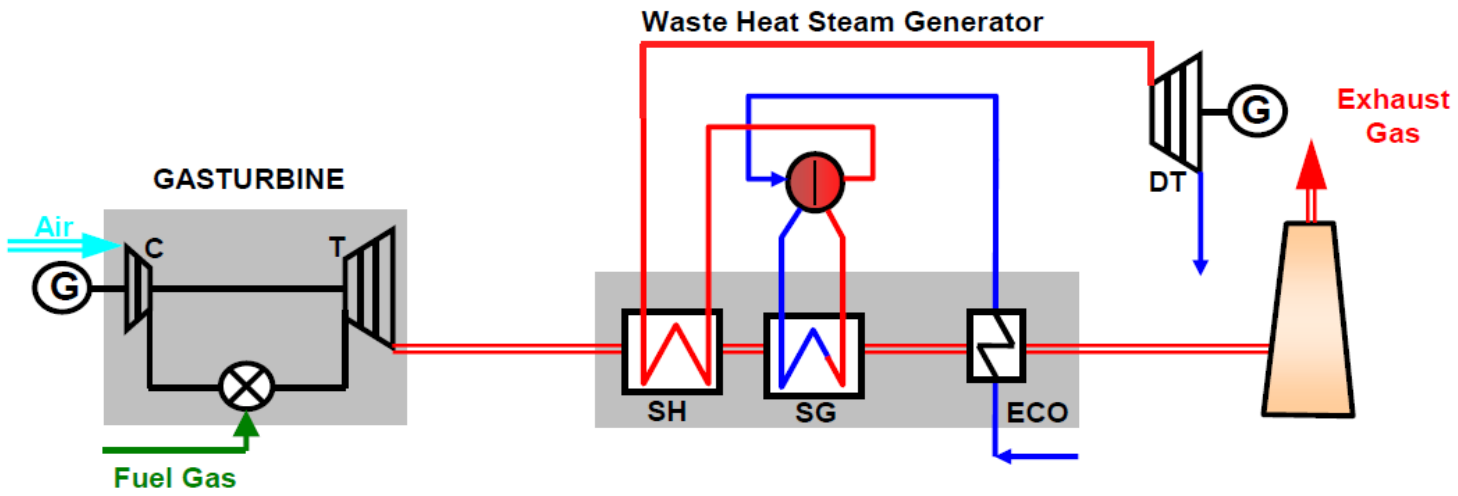

Direct Exhaust Gas Utilization

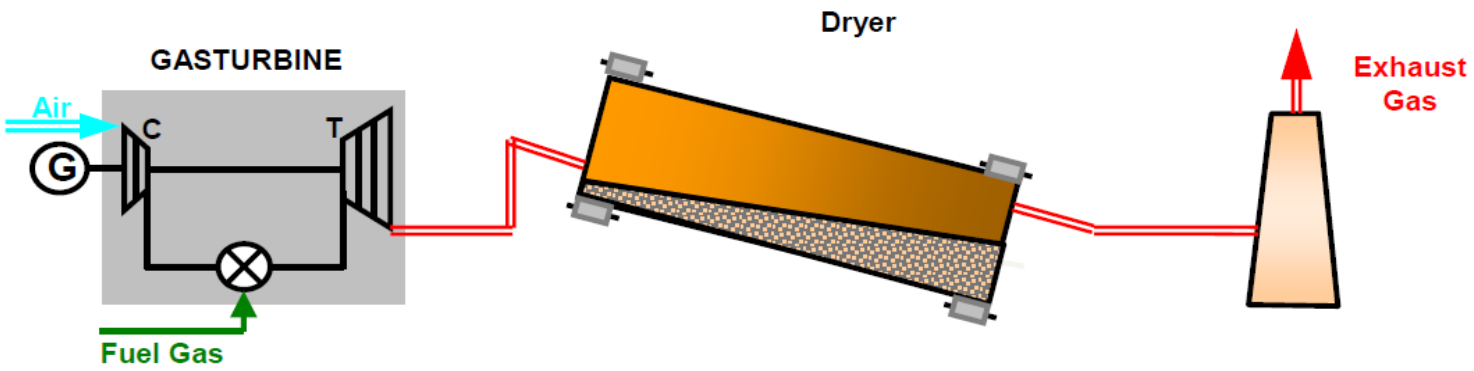

Possible Applications in Cogeneration – 2/3

Gasturbine with WHSG, SF, Bypass Stack (BS) and Draft Fan (DF)

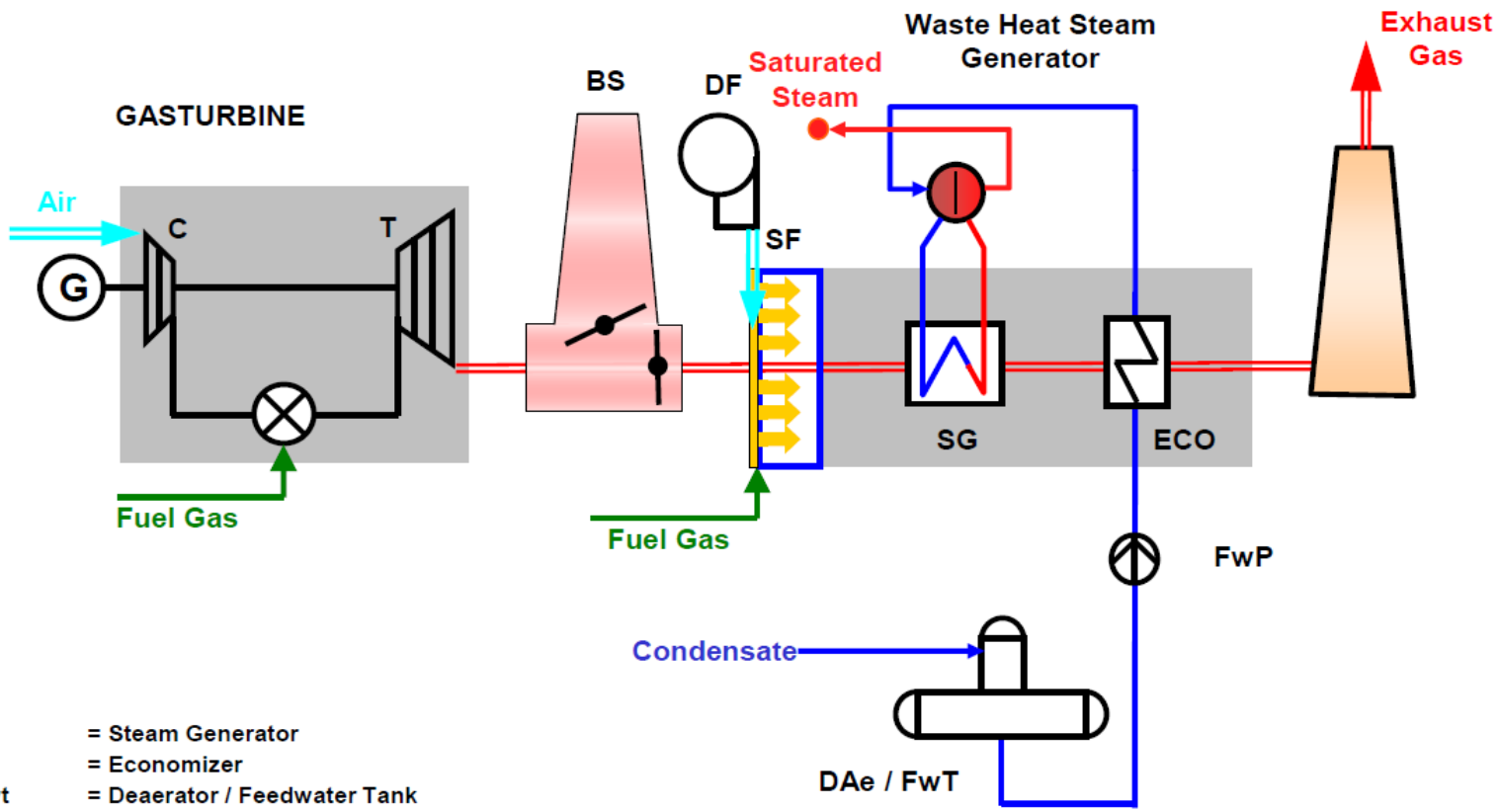

SG	= Steam Generator
ECO	= Economizer
Dae + Fwt	= Deaerator / Feedwater Tank
SF	= Supplemental Firing
BS	= Bypass Stack
DF	= Draft Fan
FwP	= Feed-water Pump

Possible Applications in Cogeneration – 3/3

Direct Fired Absorption Chiller

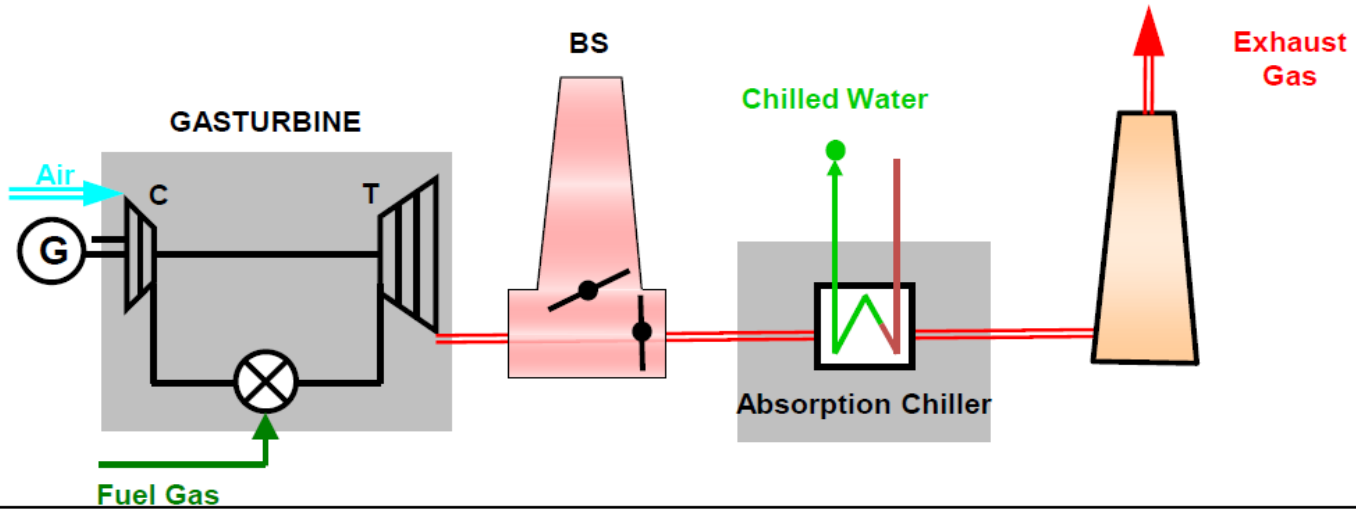

Steam Fired Absorption Chiller

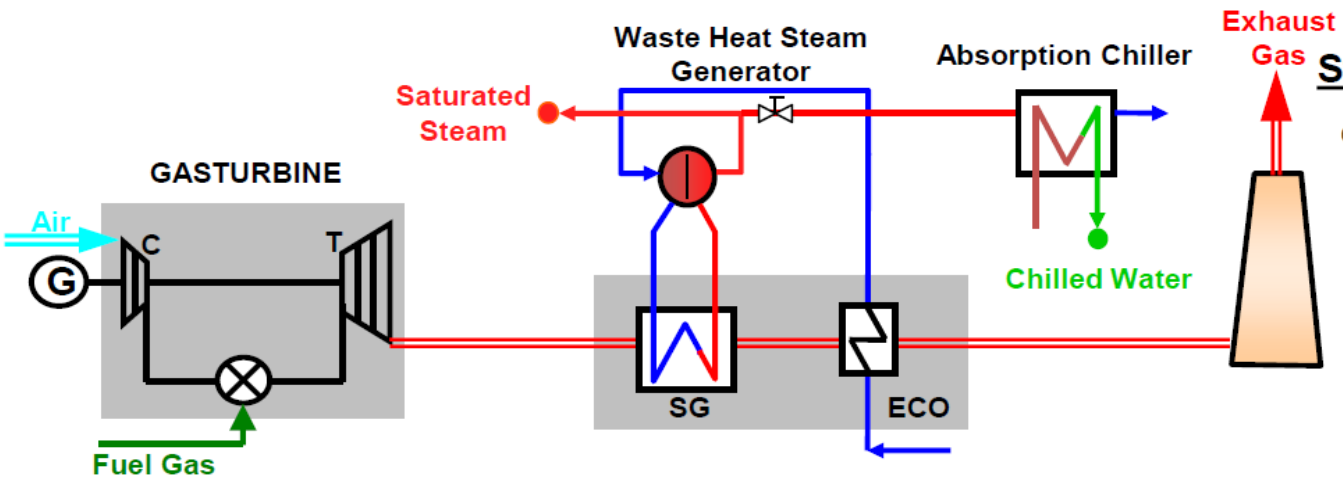

Steam fired Absorption Chiller

e.g. for part time usage in summer

Kawasaki Gas Engine Models

High Efficiency and Environmental Performance

Model		KG-12	KG-18	KG-12-V	KG-18-V
Cylinder Bore x Stroke(mm)		300 x 480			
Output (kW)	50Hz/ 750rpm	5,200	7,800	5,200	7,800
	60Hz/ 720rpm	5,000	7,500	5,000	7,500
Heat Rate(kJ//kWh)		7,346 (6,963 BTU / kWh)		7,273 (6,893 BTU / kWh)	
Electrical Efficiency (%)		49.0		49.5	
NOx(ppm)[O2=0%]		200 or Less(at O2=0%)【 57 or Less(at O2=15%) Equivalent 】			
Operating Range		30~100% Load			
Turbocharger Control System		By-Pass Valve Type 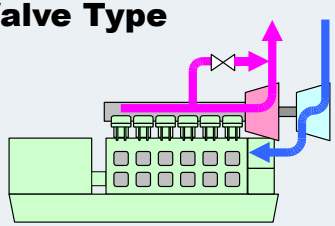		Variable Nozzle Type 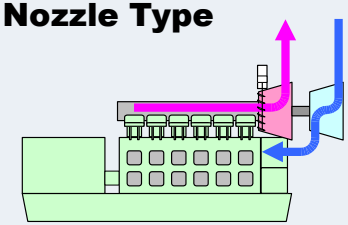	

Possible Applications in Cogeneration of KG 18V, KG 12V

Typical Application for Steam/Hot Water/Chilled Water Demand

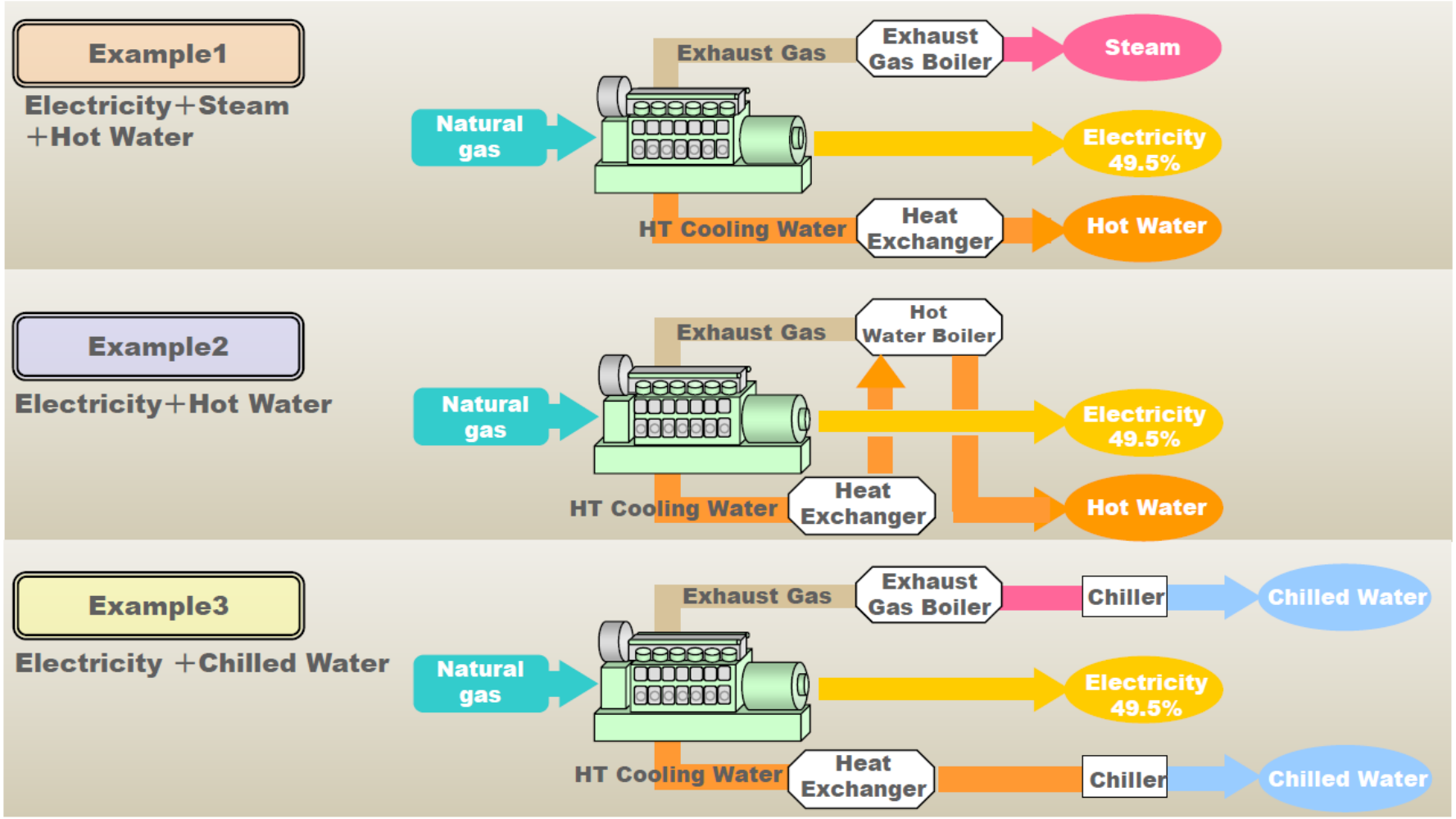

Performances in CHP

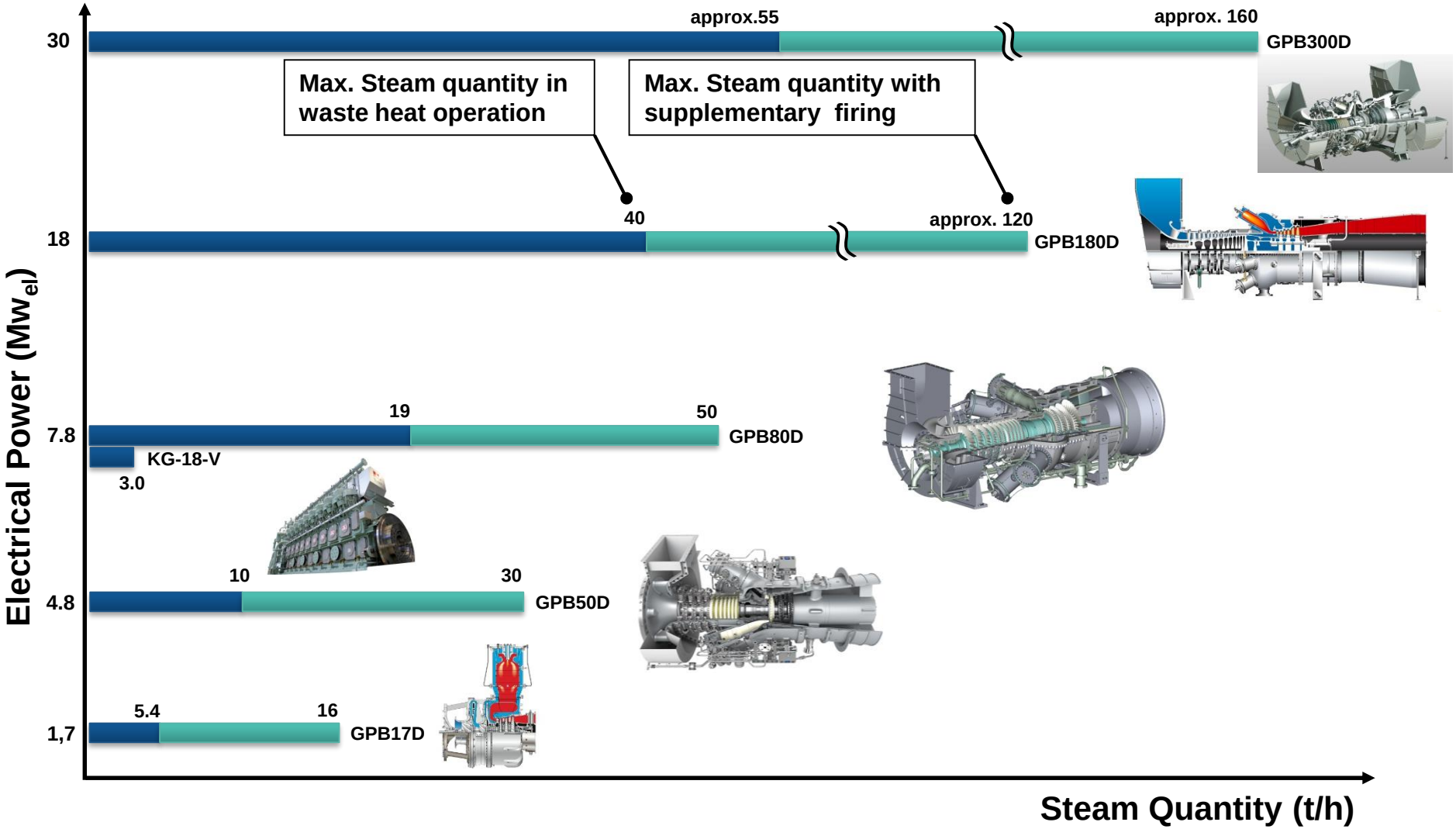

Installations Records (as of 04.2018)

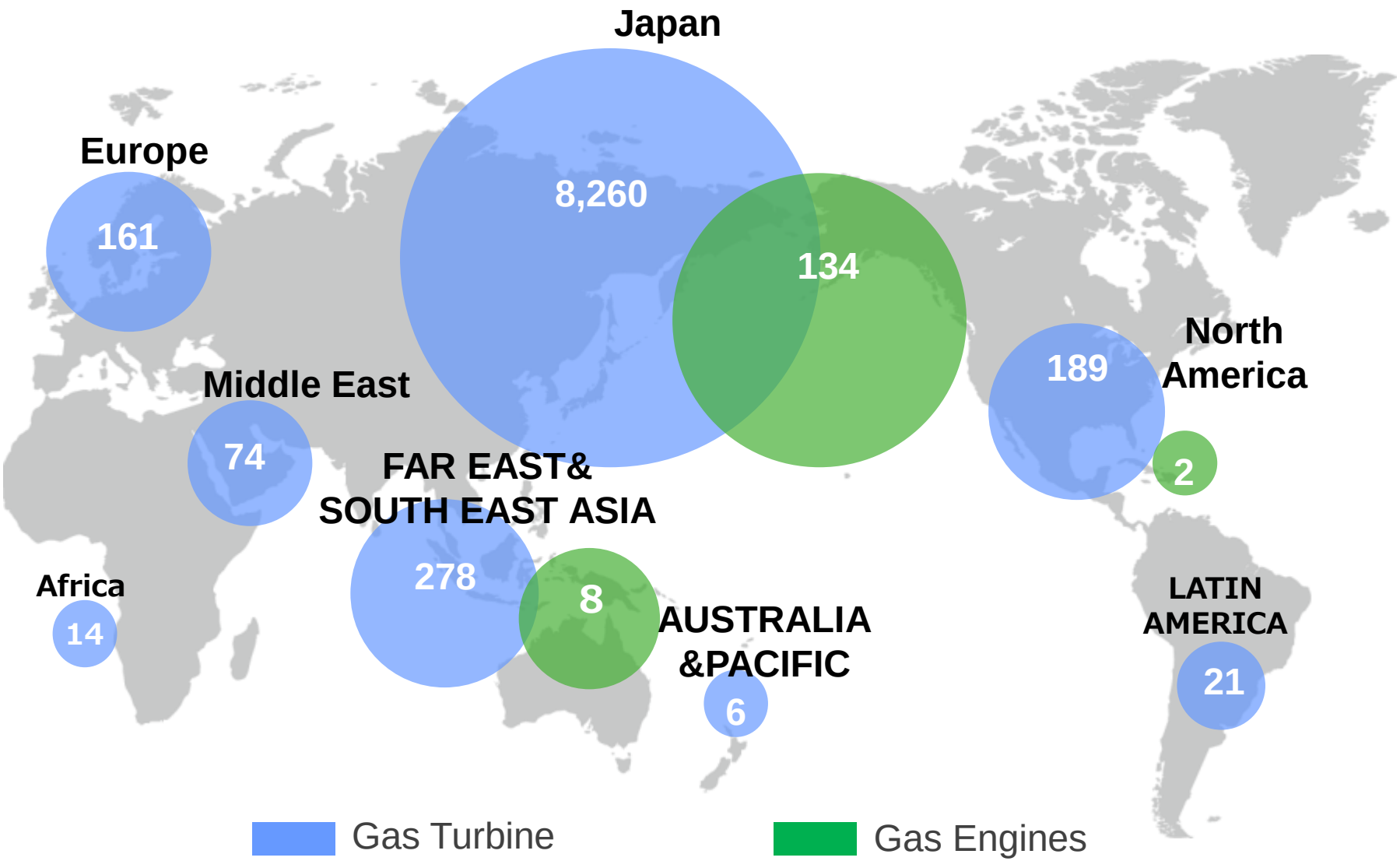

※ Far East Russia is included in Europe.

GPB17 example of installation /P Kelco Großenbrode (D)

Project background

- Supplementation to existing conventional boilers with Steam turbine

Challenges

- **Maritime climate**
- **First GPB17 with 9 ppm NOx-System in Europe**
- **Low sound level of 65dB(A) because of tourist region**
- Extended scope of supply:
  - gas boost compressor
  - Re-cooling system

Project key data

- Commissioning: September 2014
- Output (electrical): 1,735 kW at 10° C
- Efficiency (Electrical, terminal, LHV): 26.7 %

GPB80 example of installation / AGFA (B)

Project background

- Supplementation of steam generation by one GTGS, boilers with supplementary firing

Challenges

- Limited space
- Low noise level for all aggregates
- Combustion air cooler
- Electrical cabinets separate
- Extended scope of supply:
  - Gas Boost Compressor
  - Water tube boiler with ECO2
  - Supplementary firing up to 40 t/h
  - Stainless steel chimney

Project key data

- Commissioning: 08/2011
- Output (electrical, at 11° C): 7,480 kW
- Efficiency(Electrical, terminal, LHV): 34.4 %

Fuji Power Plant for Shizuokagas and Power Company /J

Domestic dispersed power system

Model	**KG-18-V**
Unit Output	**7,800kW**
No. of Unit	**2**
Total Output	**15.6MW**

Joetsu Green Power Project for Nihon Techno / J

Model	KG-18-V
Unit Output	7,800kW
No. of Unit	14
Total Output	109.2MW

Hybrid CHP for Chemical Industries (JPN)

Example of installation
GPB80 GT and KG-18 GGE, Japan

CHP Package	GPB80D ＋Gas Engine
Output	M7A（7.5MW）x 3 units KG-18-V（7.8MW）x 1 unit 26t/h Package Boiler

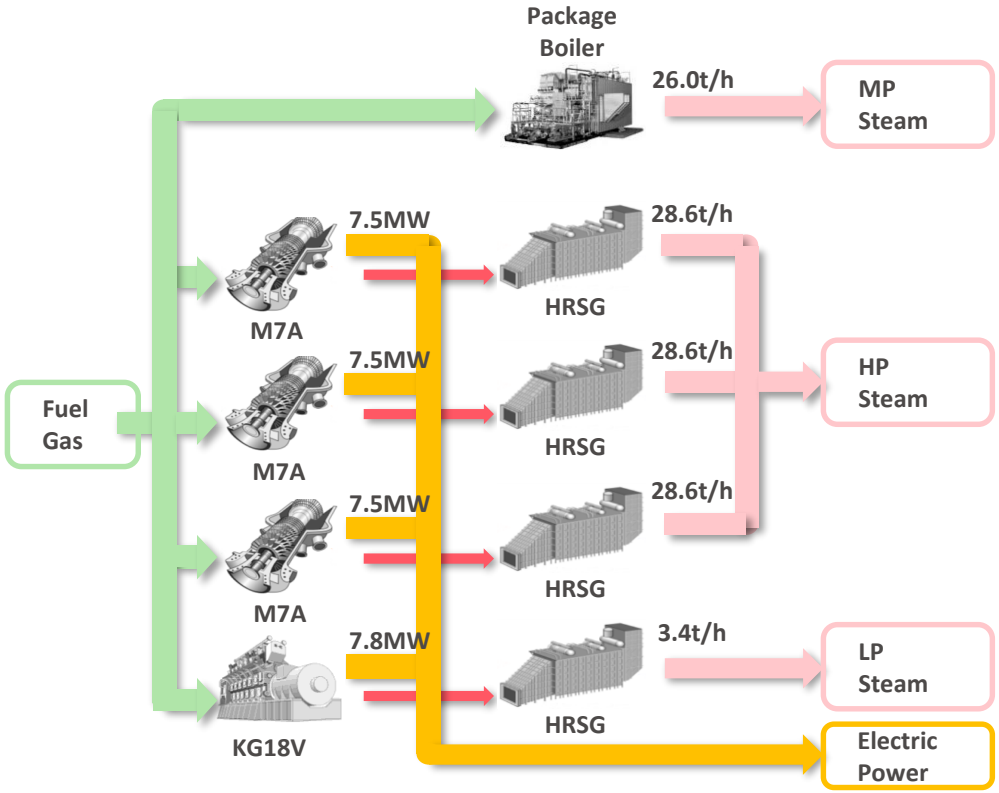

LP : Low Pressure
MP : Medium Pressure

Hybrid CHP for Industrial Park (THA)

Optimal Configuration for load alteration (Peak/Off-peak)
By Hybrid Combined Cycle (Gas Turbine & Gas Engines + Steam Turbine)

~Peak (Day) Time~

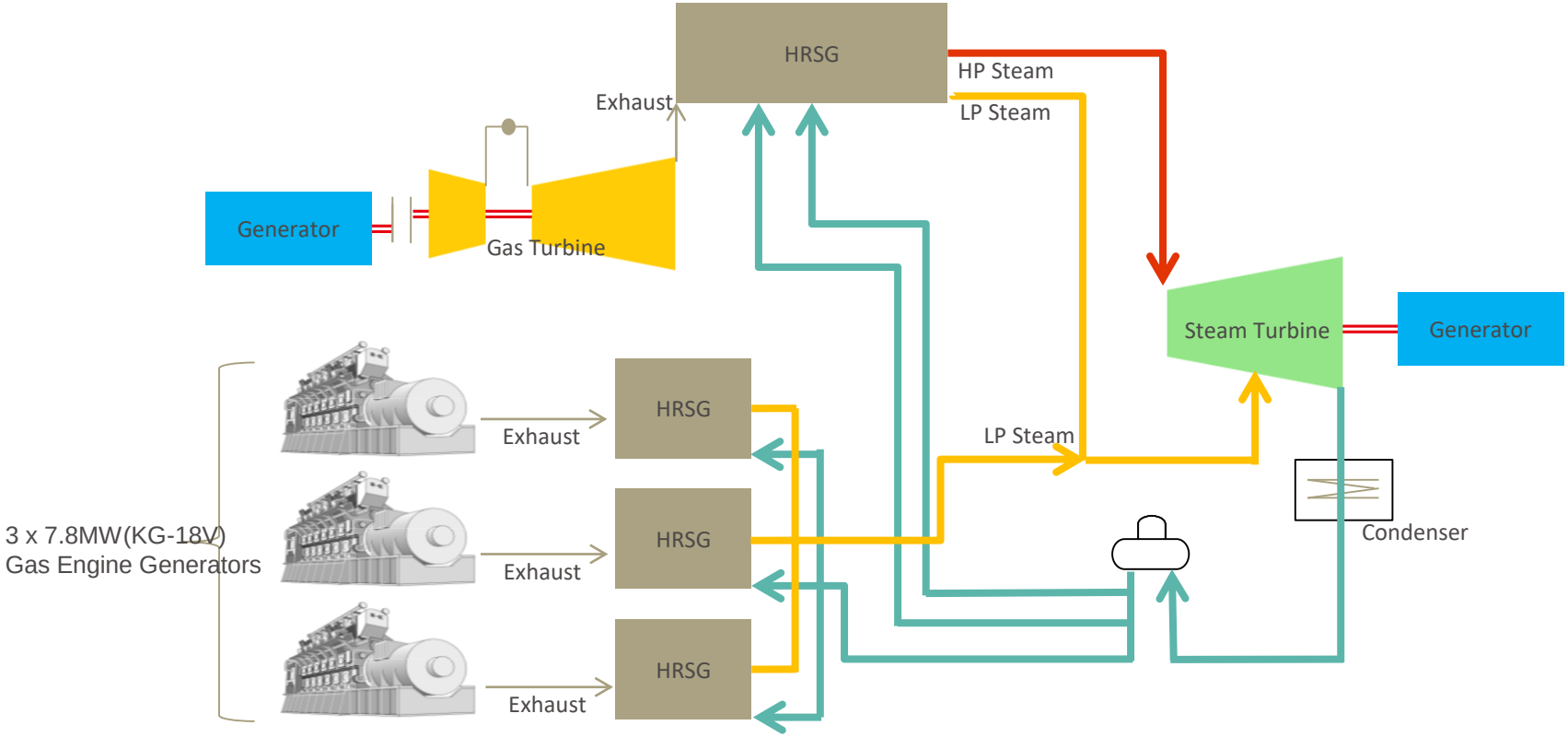

Hybrid CHP Reference for Industrial Park (THA)

Optimal Configuration for load alteration (Peak/Off-peak)
By Hybrid Combined Cycle (Gas Turbine & Gas Engines + Steam Turbine)

~Off-Peak (Night) Time~

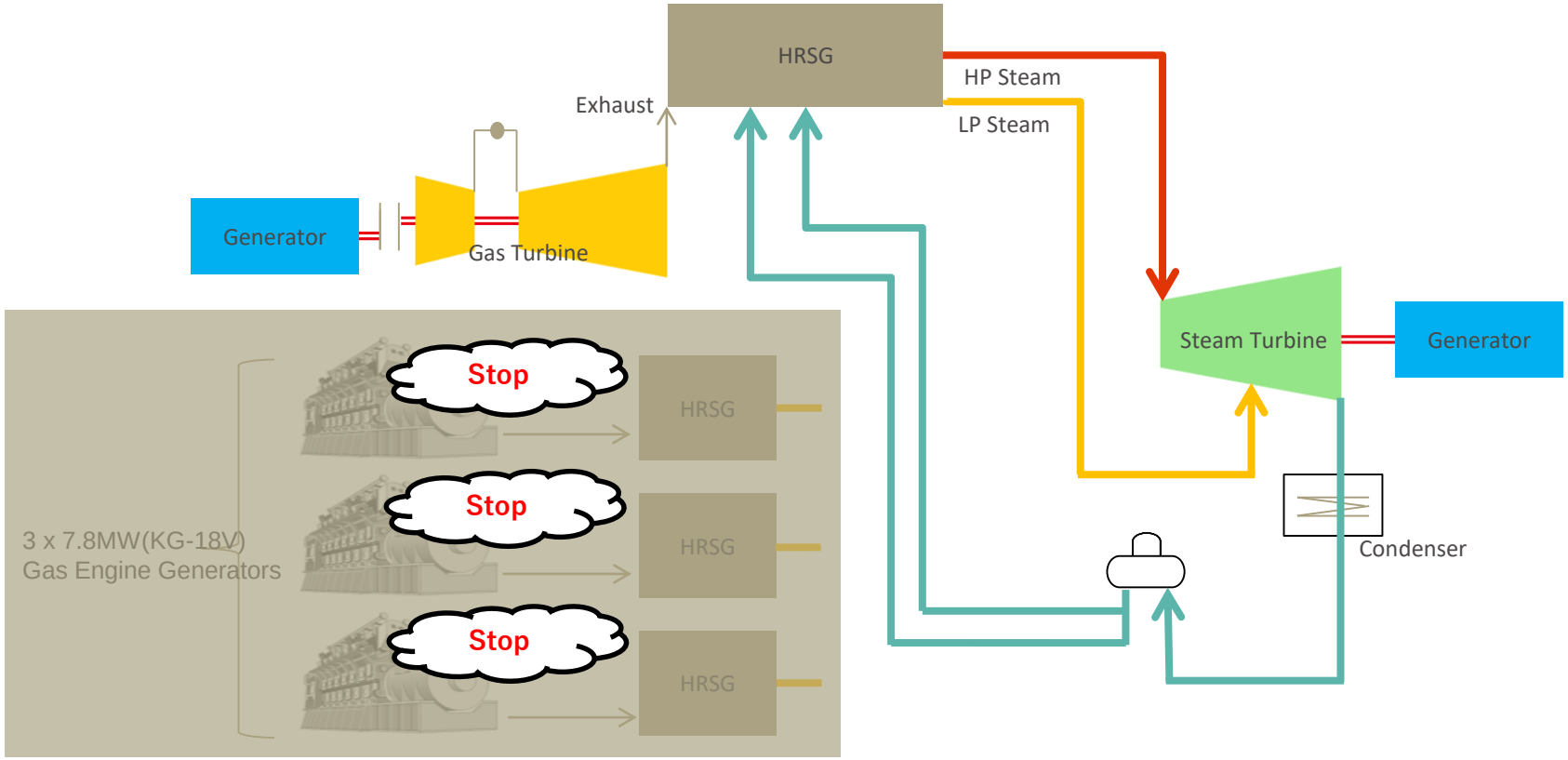

How KGE Team Works

- KGE provides individual consultancy from early beginning of CHP project – ***The customer will never walk alone***;

- KGE provides the optimal solution according with the customer energy and economical requirements – ***Maximum profit and flexibility in Operation***;

- KGE, for each project, simulates the performances of running machines according with customer energy consumption – ***Guaranteed Performance***;

- KGE designs them solutions according with site conditions – ***Customized Solution***;

- KGE, together with them partners, can provide ***Financial Solutions***;

How KGE Team Works

- KGE can offer extended scope of supply – ***Engineering, Procurement***;
- KGE provides project management, as well as detailed engineering – ***Partnership with Customer***;
- KGE provides all the activities for project implementation – ***Erection, Commissioning and Start-up***;
- KGE provides full maintenance for long term, spare parts and remote monitoring – ***Sustainable Cooperation with Our Customer is Warranted.***

Kawasaki Hydrogen Road Map

KOBE city

Development of Smart Community Technology by Utilization of Cogeneration System with Hydrogen Gas Turbine

Kawasaki Hydrogen Road Map

The first attempt in the world to supply electric power and heat generated from hydrogen gas turbine to an actual urban area

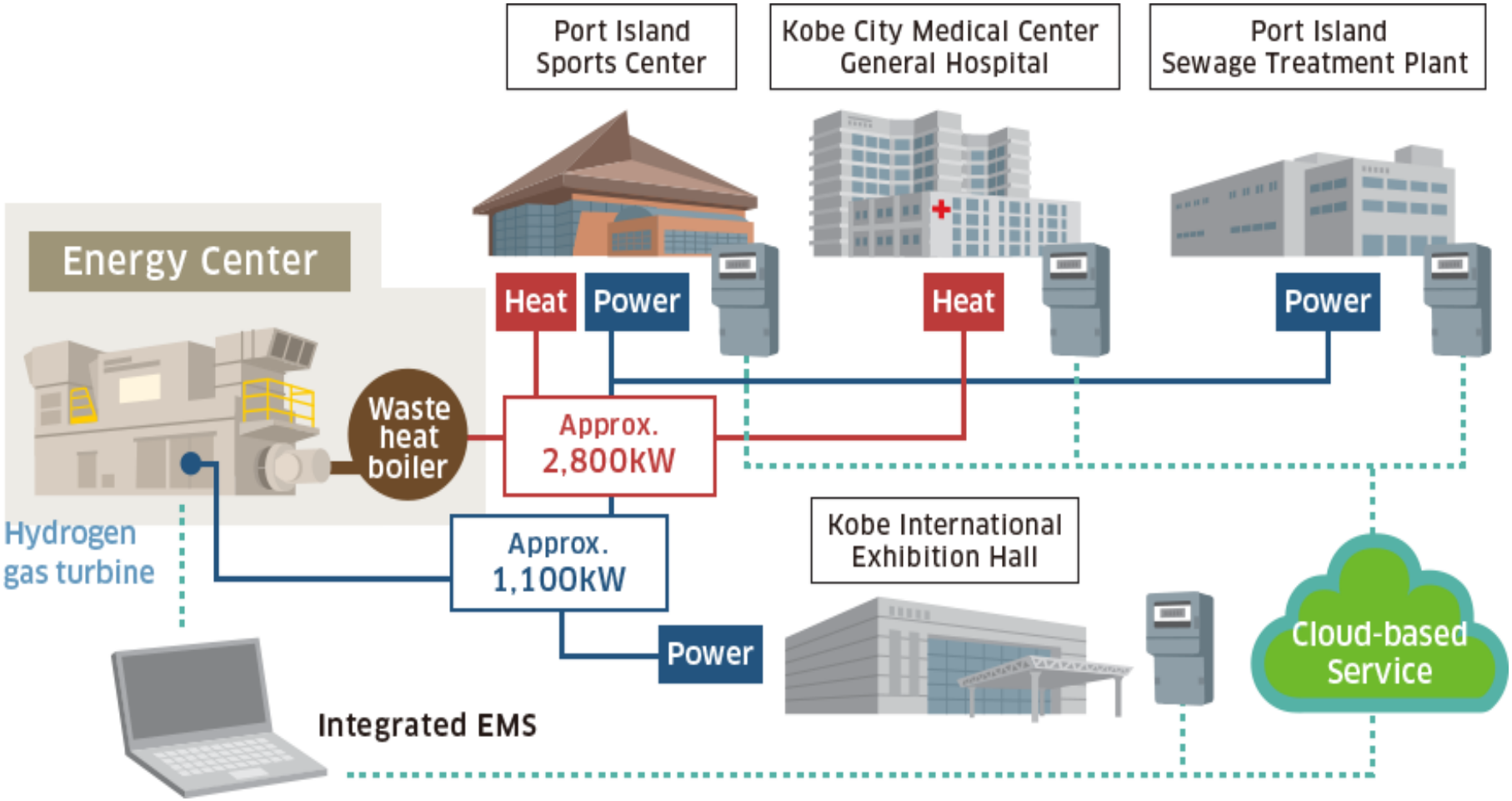

Kawasaki Hydrogen Road Map

Gas Turbine CHP Plant using 100% Hydrogen as a fuel

Power Generation: 1.7 MWe

Partners:

- **Obayashi**
- **Kawasaki**
- **Kobe City**
- **KEPCO**
- **Iwatani**
- **Osaka University**

Supported by NEDO

Kawasaki will pursue "manufacturing that makes the Earth smile."

“Global Kawasaki”

Kawasaki
Powering your potential